VK End Caps

Elastomer Materials:	Temp. Range		
Nitrile	-40°C	to	120°C
Viton®/Fluorocarbon	-26°C	to	204°C

Product Description:

VK end caps are a rubber-to-metal bonded cap commonly used as a plug or cap on gear boxes. End covers (caps) are designed to fit directly on housing bores for rotary shaft lip seals. VK end caps are primarily stocked in Nitrile, however, fluorocarbon VK end caps are available upon request.

Part Numbers:

VK - ___ ___ ___ X ___ ___

O.D. Height

Example: VK 47X7 - Nitrile VK End Cap, 47mm O.D., 7mm Height

VK End Caps

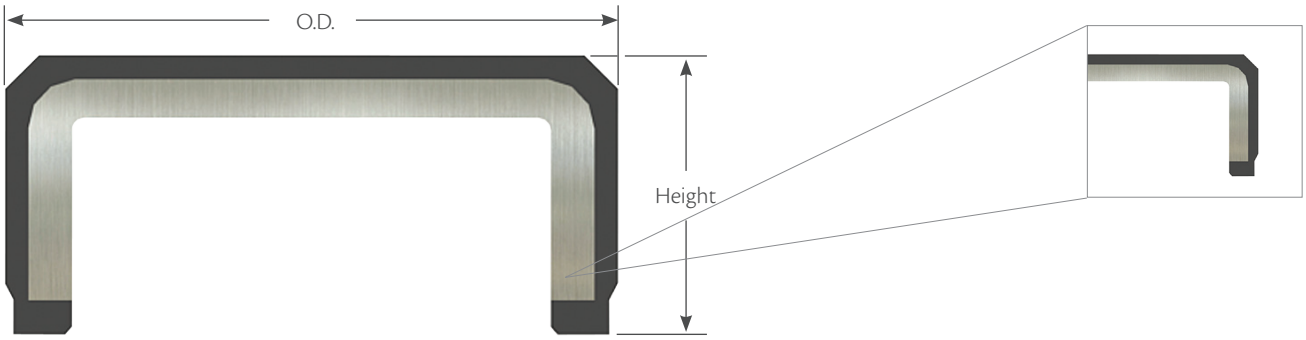

Part Number	O.D.	Height
VK 19X6	19.00	6.00
VK 19X7	19.00	7.00
VK 22X7	22.00	7.00
VK 25X7	25.00	7.00
VK 26x65	26.00	6.50
VK 28X4	28.00	4.00
VK 28X7	28.00	7.00
VK 30X7	30.00	7.00
VK 30X8	30.00	8.00
VK 32X7	32.00	7.00
VK 35X7	35.00	7.00
VK 35X8	35.00	8.00
VK 35X10	35.00	10.00
VK 37X5	37.00	5.00
VK 37X7	37.00	7.00
VK 37X10	37.00	10.00
VK 40X7	40.00	7.00
VK 42X7	42.00	7.00
VK 42x95	42.00	9.50
VK 45X5	45.00	5.00
VK 47X4	47.00	4.00
VK 47X65	47.00	6.50
VK 47X7	47.00	7.00
VK 47X10	47.00	10.00
VK 50X5	50.00	5.00
VK 50X10	50.00	10.00
VK 52X7	52.00	7.00
VK 52X10	52.00	10.00
VK 55X10	55.00	10.00
VK 60X7	60.00	7.00
VK 60X8	60.00	8.00
VK 62X7	62.00	7.00
VK 62X8	62.00	8.00
VK 62X10	62.00	10.00

Part Number	O.D.	Height
VK 62X12	62.00	12.00
VK 68X8	68.00	8.00
VK 69X10	69.00	10.00
VK 70X9	70.00	9.00
VK 72X9	72.00	9.00
VK 72X10	72.00	10.00
VK 75X7	75.00	7.00
VK 80X7	80.00	7.00
VK 80X10	80.00	10.00
VK 80X12	80.00	12.00
VK 85X10	85.00	10.00
VK 85X12	85.00	12.00
VK 90X8	90.00	8.00
VK 90X10	90.00	10.00
VK 90X12	90.00	12.00
VK 95X10	95.00	10.00
VK 100X10	100.00	10.00
VK 100X12	100.00	12.00
VK 110X10	110.00	10.00
VK 110X12	110.00	12.00
VK 120X12	120.00	12.00
VK 125X12	125.00	12.00
VK 130X12	130.00	12.00
VK 140X15	140.00	15.00
VK 145X12	145.00	12.00
VK 150X13	150.00	13.00
VK 150X15	150.00	15.00
VK 150X18	150.00	18.00
VK 150X25	150.00	25.00
VK 160X15	160.00	15.00
VK 170X15	170.00	15.00
VK 180X12	180.00	12.00
VK 200X13	200.00	13.00